Sample Deck Dwg.

INDEX SHEET

1. Index Sheet & General Notes
2. Site Plan
3. Foundation & Framing Plan
4. Deck Finished Floor Plan
5. Left Side Elevation
6. Right Side Elevation View
7. Front Elevation View
8. Post & beam Detail
9. Full Deck Section View
10. Stair Section View
11. Handrail Sections & Ledger Board Detail

General Notes

1. All lumber shall be pressure treated for exterior use. All metal fasteners & hangers shall be compatable with the treatment.
2. All beams, joists and decking shall be No. 1 Southern Pine.
3. All posts shall be No. 2 Southern Pine.
4. All beam splices shall occur over posts.
5. All footings shall be poured-in-place concrete with a min. 2500 psi strength.
6. Guards are required at all areas where the deck floor is greater than 30" above finished grade.
7. Required guards shall be 36" tall (min.) and be constructed such that a 4" diameter object will not pass through and shall not create a ladder effect.
8. Guard support post spacing shall not exceed 8 ft.
9. Required guards & handrails at stairs shall be 34" to 38" tall above the stair nosings.
10. Handrail ends (top & bottom) shall terminate into a post or be returned to a wall.
11. All treads (on stairs with closed risers) shall have a projected nosing ranging from 3/4" to 1-1/4".
12. Deck floor shall be within 16-1/2" (max. of two, 8-1/4" risers) of the top of the door threshold.
13. Live Load Deflection Criteria: Joists & Beams - l/360
14. Design Loads: Floor Live Load - 40 lbs./sf (min.)
    Wind Load - 16.4 lbs./sf
    Assumed Soil Bearing Pressure - ~~2000~~ 1500 lbs./sf max.
    Guardrails - 200 lb. concentrated load placed along the top of the rail in any direction.
    Note - This deck is not designed for hot-tub or spa loading.
15. All exterior stairs & associated landings shall be illuminated.

Property Owner: Name, Address & Phone Number
Contractor: Name, Address & Phone Number
Designer: Name, Address & Phone Number
Project Location: Address

Date:

Sheet No.
1 of 11

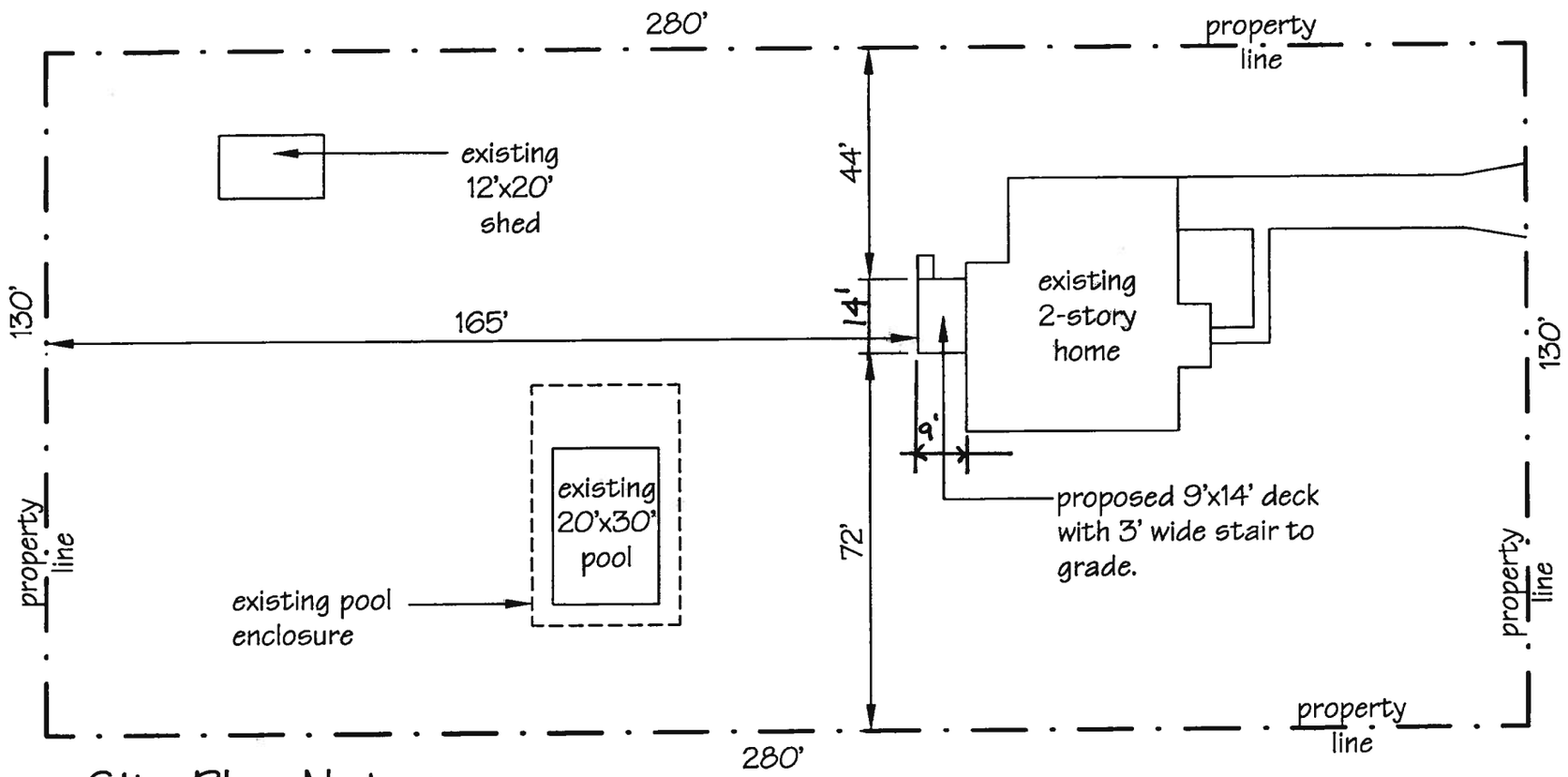

Site Plan Notes

1. Ground is level where the deck is to be built.
2. The deck floor shall not exceed 8-1/4" below the top of the door threshold.
3. Provide a 3'x3' landing at the base of the stairs.

Site Plan

Scale: 1" = 30'

Property Owner: Name, Address & Phone Number
Contractor: Name, Address & Phone Number
Designer: Name, Address & Phone Number
Project Location: Address

Date:

Sheet No.
2 of 11

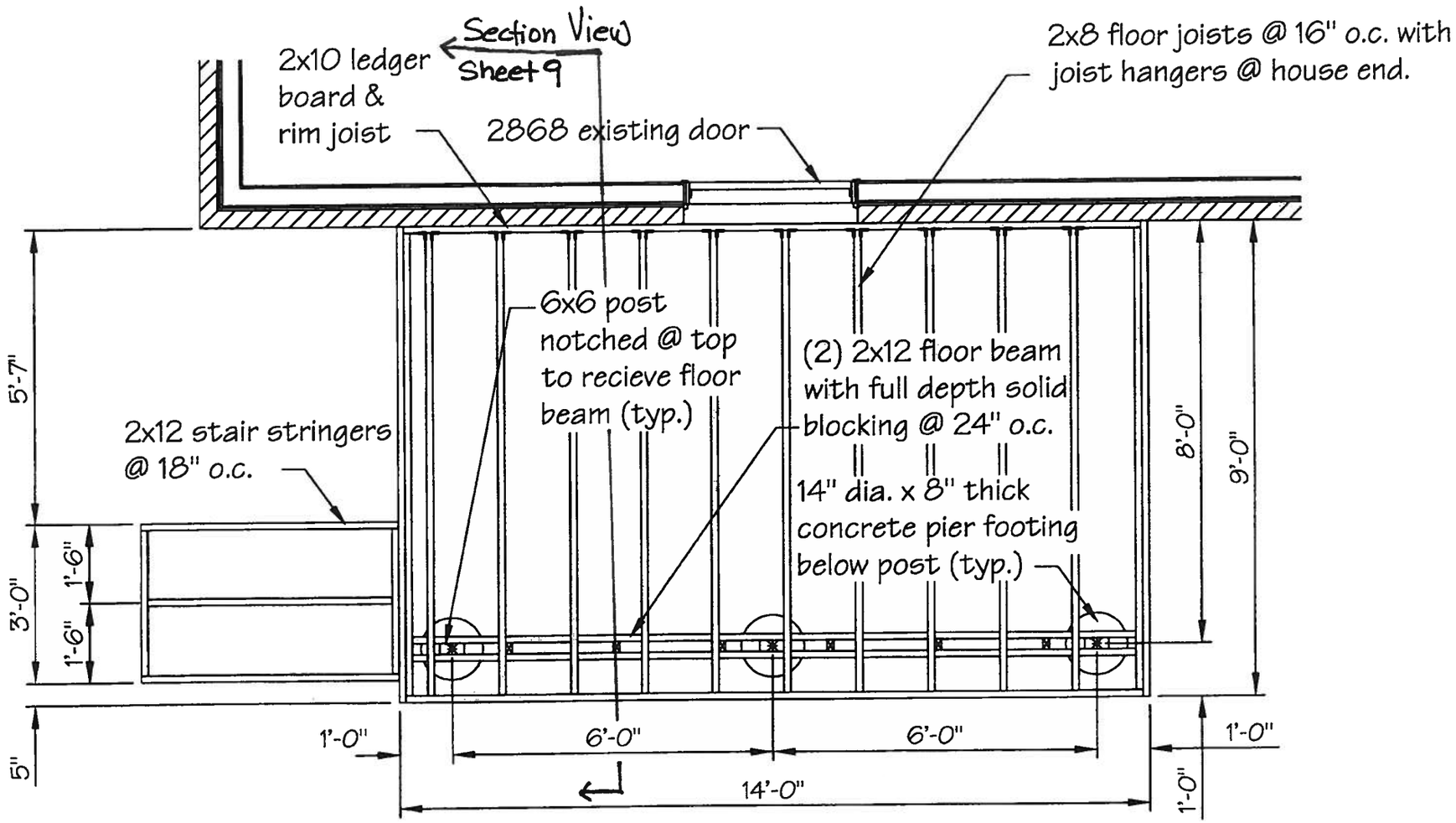

Foundation & Framing Plan

Scale: 3/8" = 1'-0"

Property Owner: Name, Address & Phone Number
Contractor: Name, Address & Phone Number
Designer: Name, Address & Phone Number
Project Location: Address

Date:

Sheet No.
3 of 11

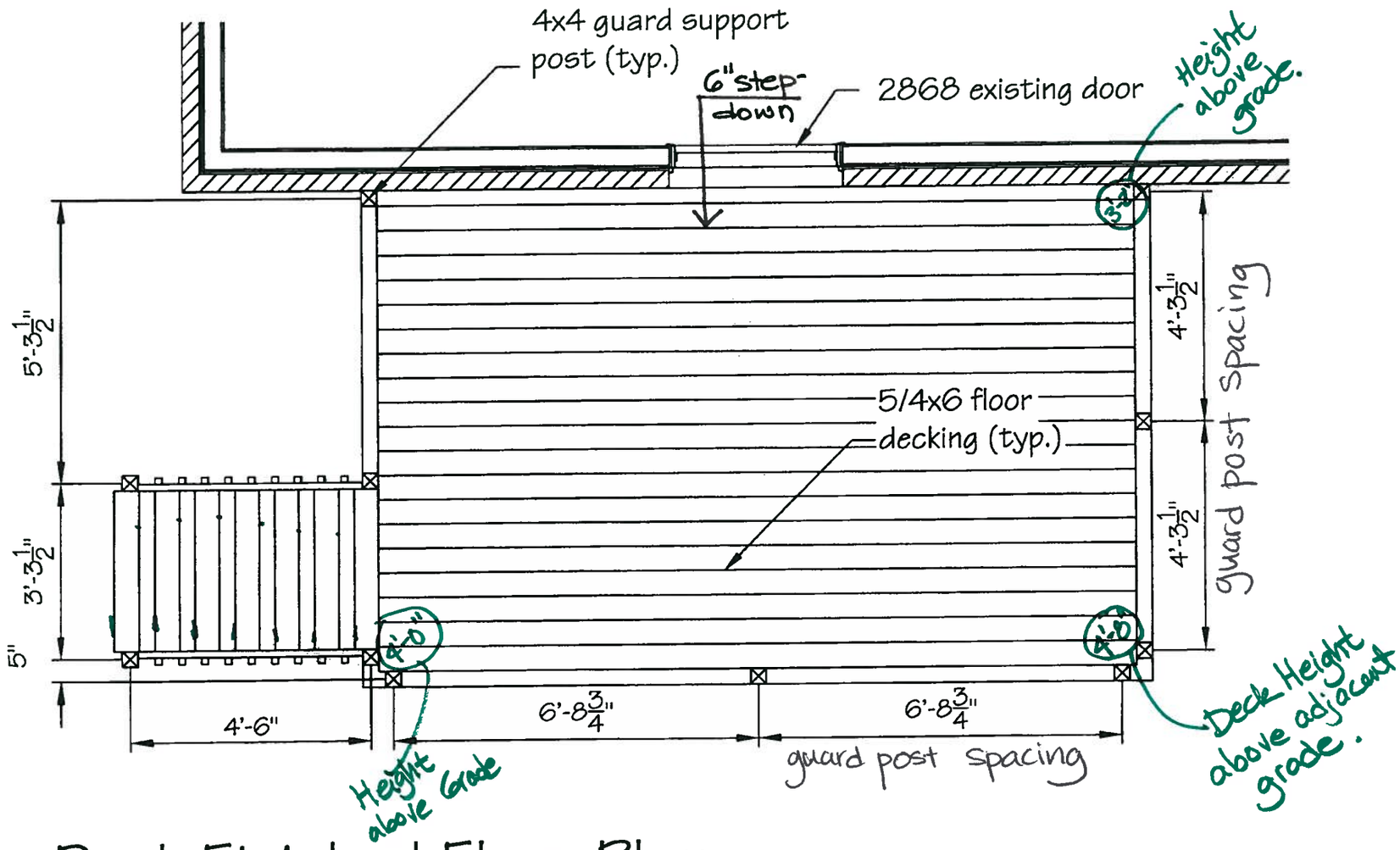

Deck Finished Floor Plan

Scale: 3/8" = 1'-0"

Property Owner: Name, Address & Phone Number
Contractor: Name, Address & Phone Number
Designer: Name, Address & Phone Number
Project Location: Address

Date:

Sheet No.
4 of 11

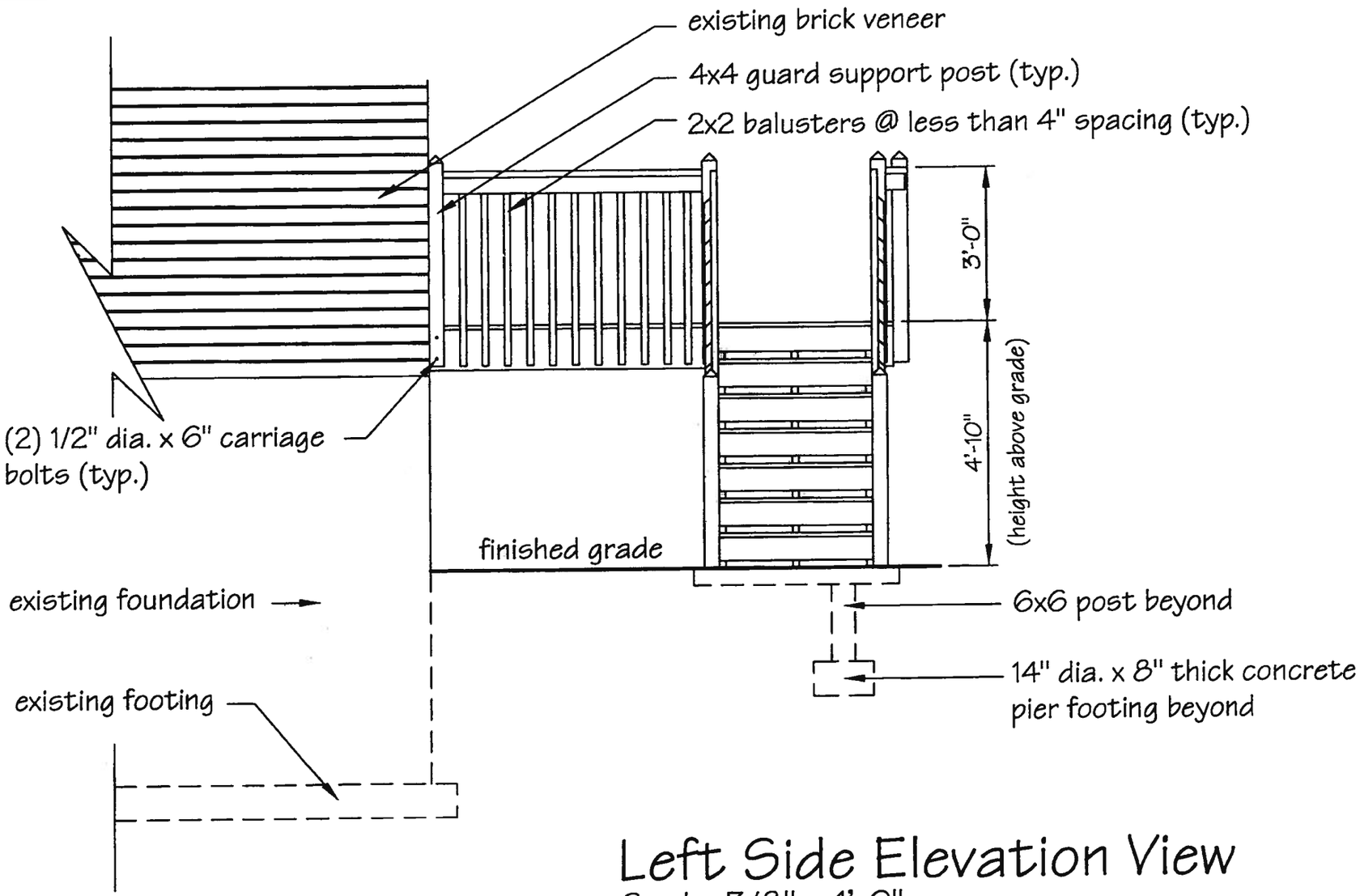

Left Side Elevation View

Scale: 3/8" = 1'-0"

Property Owner: Name, Address & Phone Number
Contractor: Name, Address & Phone Number
Designer: Name, Address & Phone Number
Project Location: Address

Date:

Sheet No.
5 of 11

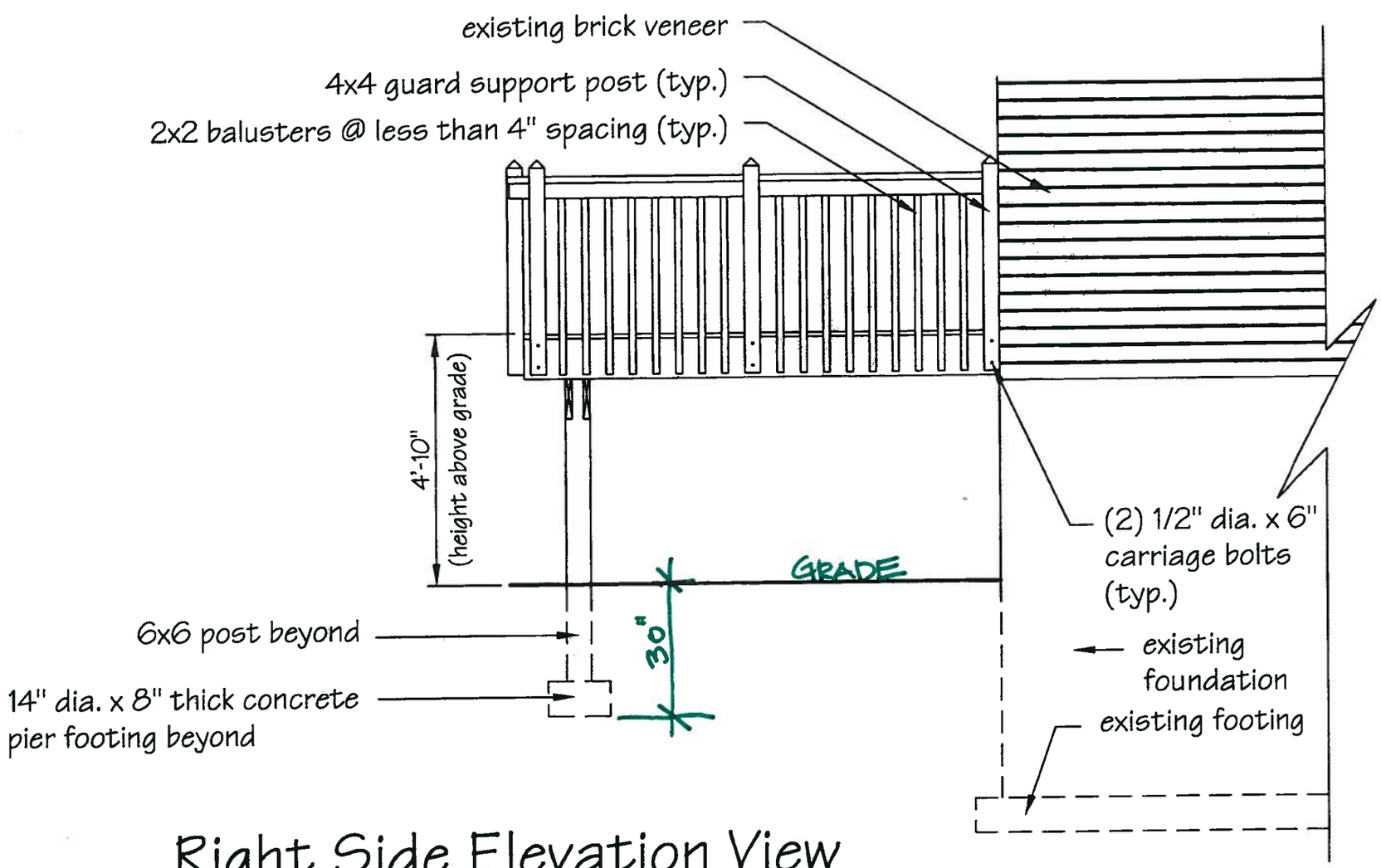

Right Side Elevation View

Scale: 3/8" = 1'-0"

Property Owner: Name, Address & Phone Number
Contractor: Name, Address & Phone Number
Designer: Name, Address & Phone Number
Project Location: Address

Date:

Sheet No.
6 of 11

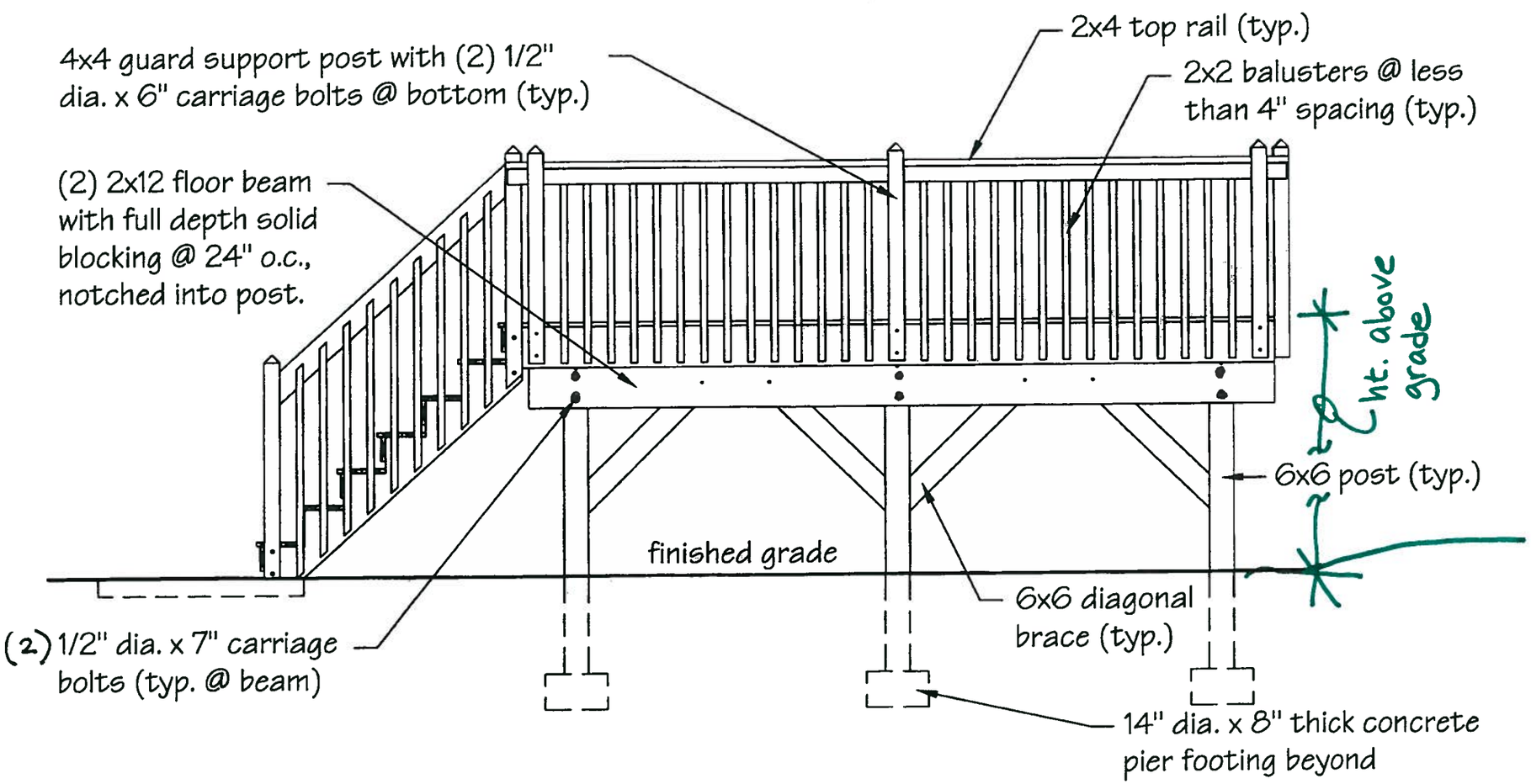

Front Elevation View

Scale: 3/8" = 1'-0"

Property Owner: Name, Address & Phone Number
Contractor: Name, Address & Phone Number
Designer: Name, Address & Phone Number
Project Location: Address

Date:

Sheet No.
7 of 11

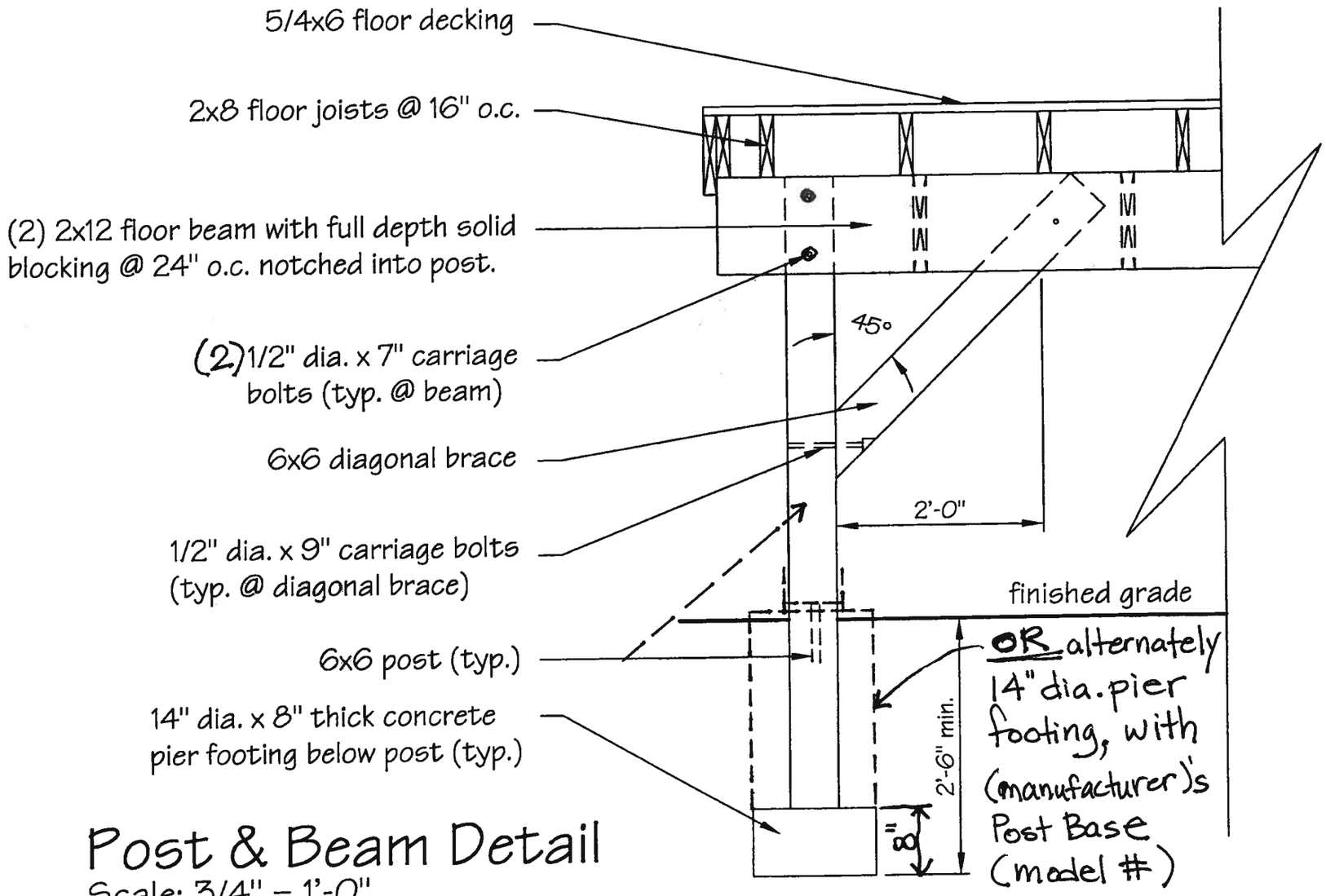

Post & Beam Detail

Scale: 3/4" = 1'-0"

Property Owner: Name, Address & Phone Number
Contractor: Name, Address & Phone Number
Designer: Name, Address & Phone Number
Project Location: Address

Date:

Sheet No.
8 of 11

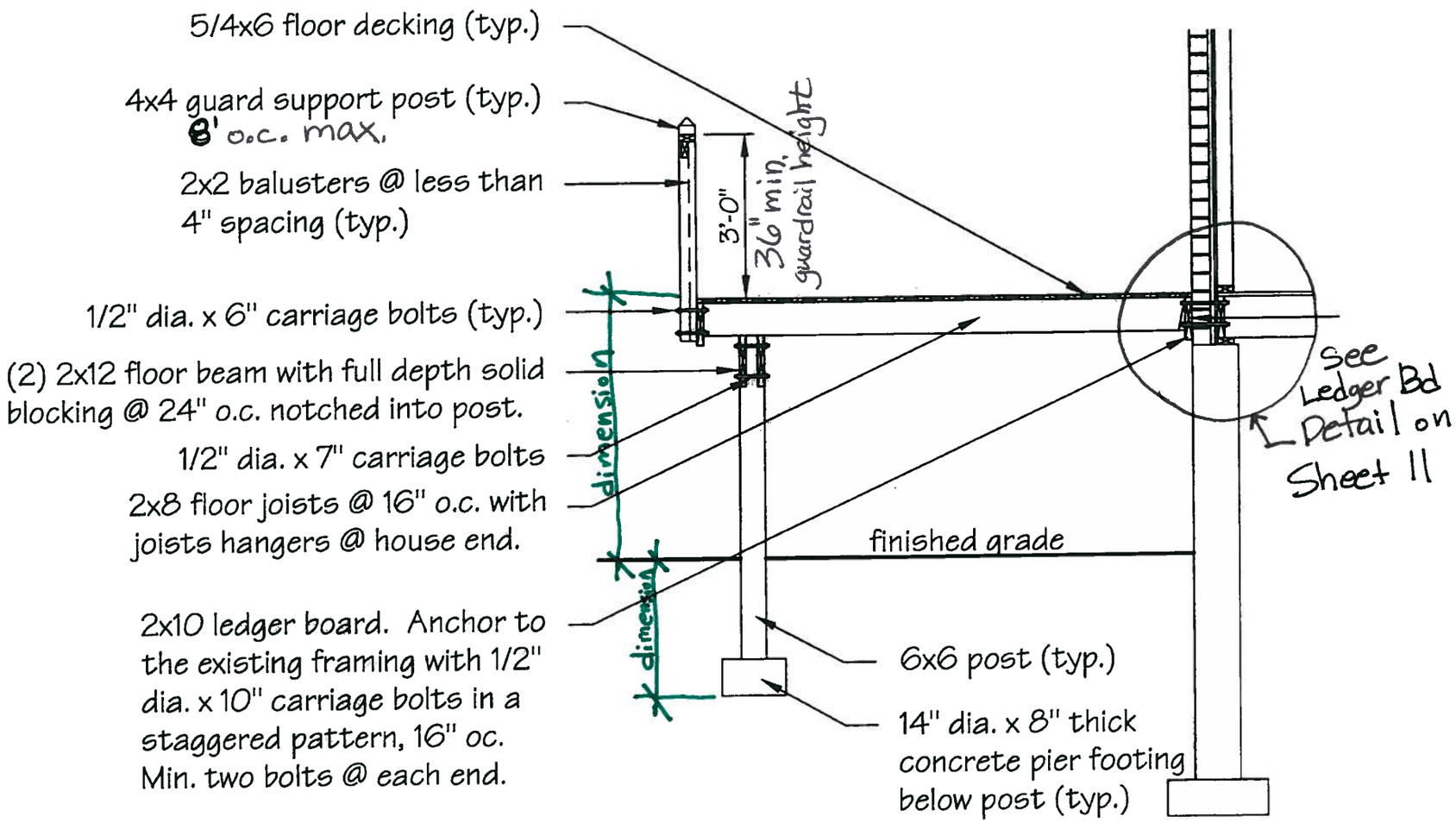

Full Deck Section View

Scale: 3/8" = 1'-0"

Property Owner: Name, Address & Phone Number
Contractor: Name, Address & Phone Number
Designer: Name, Address & Phone Number
Project Location: Address

Date:

Sheet No.
9 of 11

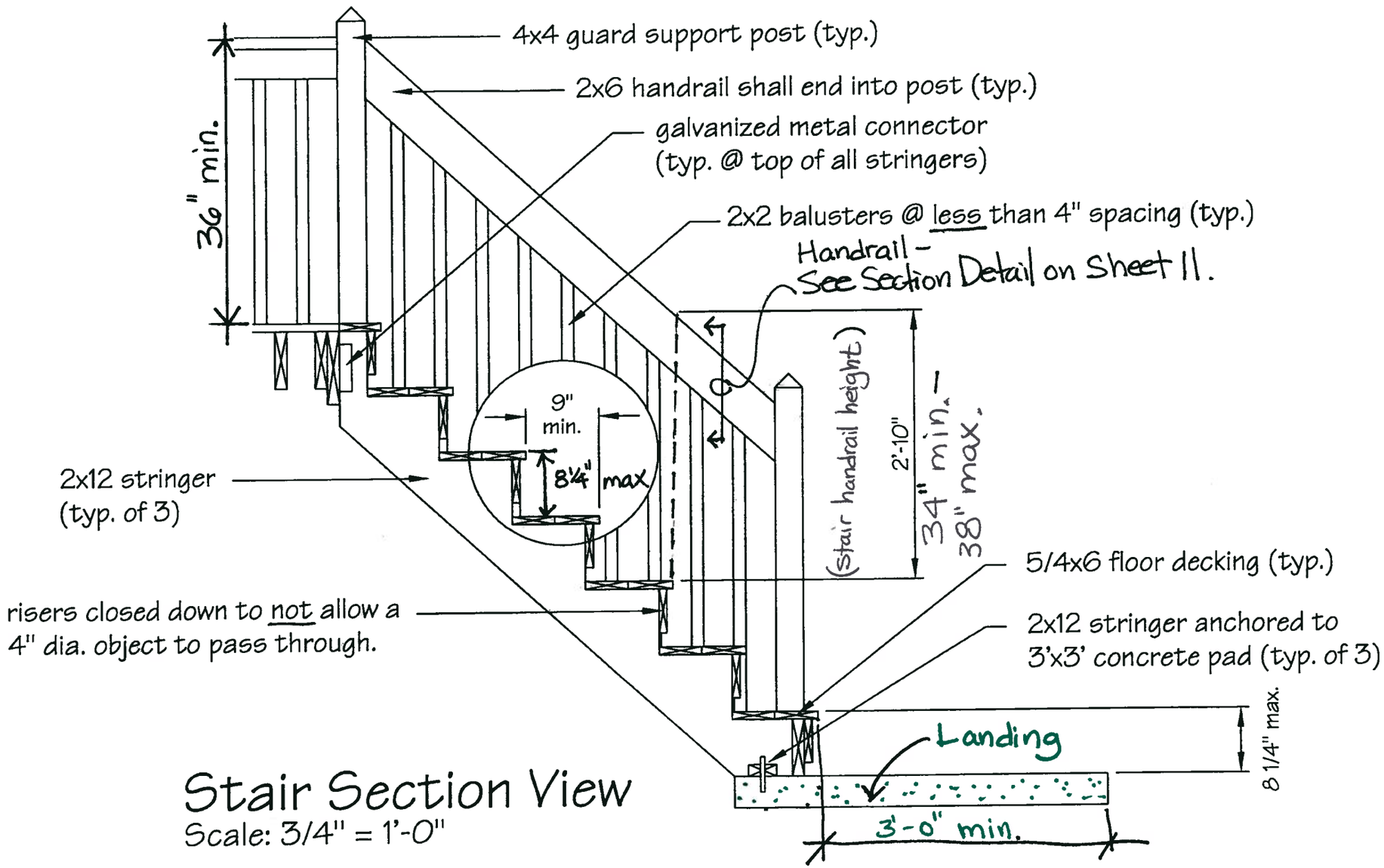

Stair Section View

Scale: 3/4" = 1'-0"

Property Owner: Name, Address & Phone Number
Contractor: Name, Address & Phone Number
Designer: Name, Address & Phone Number
Project Location: Address

Date:

Sheet No.
10 of 11

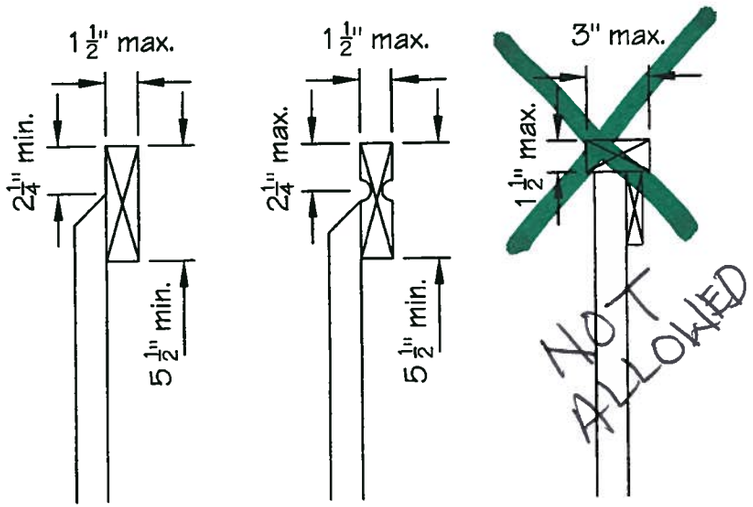

Handrail Sections

Scale: 1-1/2" = 1'-0"

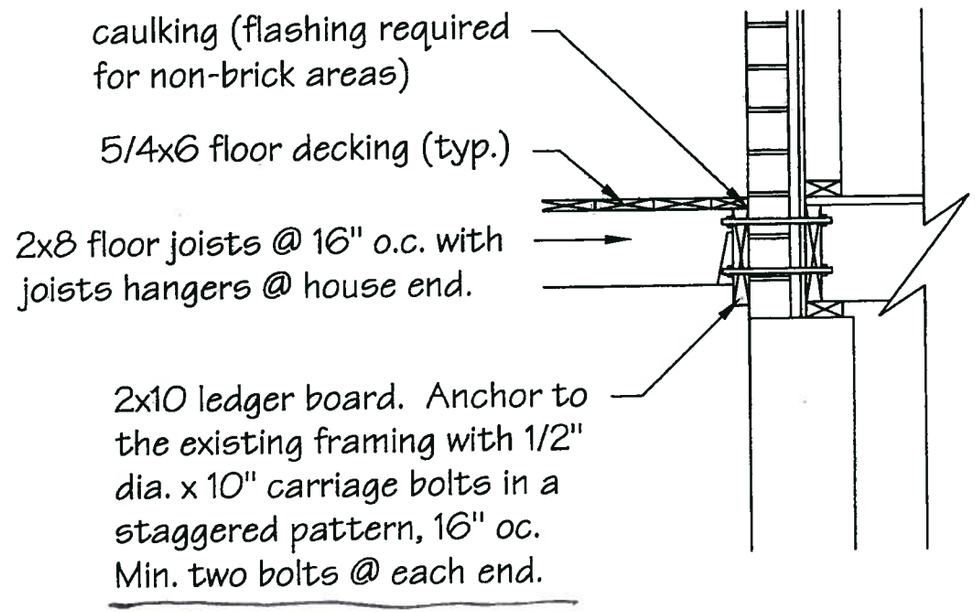

Ledger Board Detail

Scale: 3/4" = 1'-0"

Property Owner: Name, Address & Phone Number
Contractor: Name, Address & Phone Number
Designer: Name, Address & Phone Number
Project Location: Address

Date:

Sheet No.
11 of 11